Replace Reservoir Cap: HD-T731 & HD-E731

Model No.	No.	Item	Description	Part No.
HD-T731	1	Reservoirs Kits	DO3.2 Reservoir Cap Kit - Left	ABOT000820
HD-E731	2		DO3.2 Reservoir Cap Kit - Right	ABOT000821

I. Replacement reservoir cap kit : No.1-2

Kits including: ① Reservoir top cap x 1 ② Reservoir gasket x 1
③ T10 M3x8 fixing screw x 2

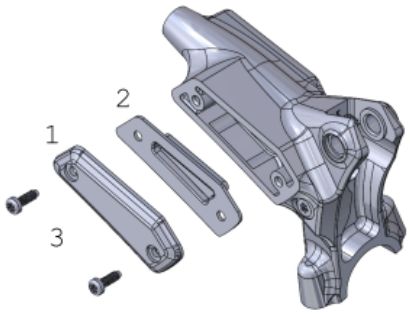

A. **Removing reservoir top cap and gasket**:

1. Loosen the bar clamp and rotate the lever on the bar until the reservoir is parallel with the ground to prevent the loss of oil.
2. Use a T10 torx wrench to remove the two reservoir top cap screws③, then remove the top cap and gasket.

B. **Installing new reservoir top cap and gasket** :

1. Thoroughly clean the edge of the reservoir on the lever so that oil doesn't get trapped between it and rubber gasket.
2. Place the gasket② and reservoir top cap① onto the reservoir.
3. Loosely install the two fixing screws③ then tighten to 0.8-1.2 Nm.

NOTE:

1. The brake must be refilled mineral oil from caliper side for making sure brake performance
2. Follow regular operation of hydraulic disc brake or refer to our Bleed Procedure instructions to bleed the brake.
3. Only use TRP and Tektro branded mineral oil when servicing the brake.
4. Use original specification spare parts for maintenance.
5. If any doubts, we recommend taking the bike to a Bosch ABS authorized dealer shop to check first

For warranty related questions or more information llease contact Tektro Service Center which you can find from our homepage www.tektro.com.

Feb.05, 2024